The Role of Transport in Logistics of Agriculture

To Identify and Define the Key Transport Cost Drivers with Impact on Agricultural Logistics

Commissioned by the NAMC
(NAMC – Agri Value Chain Reference Group Initiative)

compiled and presented by
MAX BRAUN CONSULTING SRVICES

BACKGROUND

- **Diversity of value chains**
  (size, location, distance, roads)

- **Transport from farm gate to consumer is complex**

- **A more in-depth study unlikely to differ**
  (*when expressed in average cost per kg or litre across rural, corridor and metro roads)*

- **Study can be viewed as basis for potential benchmarks for agricultural logistics**
  (when viewed in the context of the applied assumptions)

- **Factors impacting transport efficiencies indicate urgent need for collaboration**
  (agreement on steps needed to entrench sustainable, ongoing efficiencies)

- **There are perceptions that fuel prices drive food prices**
  (lack of understanding of transport costs, this illustrated further on)

- **Concerns about the rail infrastructure**
  (locomotion, wagons, service levels, rates and branch lines)

- **The impact of transport costs on rural development and emerging farmers**
  - *the need to improve access to markets*

OBJECTIVES

- In consideration of these challenges, the NAMC decided the debate around fuel and food prices and the impact of transport costs generally and particularly as it refers to rural transformation should be clarified and properly defined.

- This motivated **a review of transport services to agricultural logistics in South Africa** based on recent history and published overviews in the public domain.

The objectives of this report is to identify and define the key transport cost drivers with impact on agricultural logistics.

INFRASTRUCTURE REVIEWS

- Review covers the transport services available to agriculture in South Africa
- Includes a brief historical overview of infrastructure and relevant legislation – information is drawn from informed and published sources.

- The **range of rail services available to agricultural logistics** and its **impact on the state of agricultural logistics**, based on;
  - recent and historical infrastructures review from other studies
  - relevant legislation
  - comments from several contributors to the study.

INFRASTRUCTURE REVIEWS | RAIL TRANSPORT

- The **tons transported by rail** during the period 2004 to 2006 shows a **declining percentage of all freight transported by rail**

- TFR played a role in agricultural logistics during 2008 transporting a variety of grains including barley, sun flower baled and seed cotton, as part of the 82 million tons of general freight it transported last year.

TFR share of freight movements (*millions of tons*)

Year	2004	2005	2006	2007
Rail tons	200	206	196	205
Total tons	1239	1416	1533	1538
Rail %	16.14%	15.54%	12.8%	13.9%

Source: CSIR 2008

Universal questions in agricultural logistic circles include;

1. Which **branch lines** will be restored and how long will it take to get them working again?
2. Are the **branch lines viable**, if so to what extent?
3. If so, how should they be **operated** and **operating costs be covered**?
4. Can **sufficient ton/km be generated** to justify the investment and cost of operating and maintenance?
5. Can **seasonal relatively low volumes justify** the huge investment it will take to rehabilitate and implement these supplementary services?
6. Would **branch line rail services haul loads both ways**, or just one way? How many growers, silo and mill operators, etc, would prefer to use road transport to get freight to a core rail system?

Previous studies/documents

Moving South Africa, a Department of Transport (*DoT 1998.8*) *initiative focused on developing industry structures to capture appropriate economies of scale, promote value-based rivalry between transport modes and firms where appropriate and drive innovation and continuous upgrading in transport services and infrastructure.*

This was focused on available capital to upgrade key routes and nodes that carry the majority of volumes to assist densification trends and preserve customer value and the network.

A supporting network via feeder and distribution channels to support the strategic backbone and general services between nodes to meet customer goals for low cost and reliable transport where demand densities are lower than in the strategic network was envisaged.

This meant lower levels of fixed cost and higher levels of variable costs. requiring separation from the core operation through corporatisation, outright sale, concessions or franchises. *Depending on volumes, densities, condition of the network and economic viability decisions to abandon rail services on certain routes or certain customer segments may needed to be taken.*

Previous studies/documents

Freight Transport Flow Model for South Africa

The Development and Application of a Freight Transport Flow Model for South Africa, Prof Jan Havenga (2007.9) reviews historic infrastructure planning in terms of performance and planning measurement systems

(excerpts from Prof Havenga's dissertation include)

- When state assets were commercialised, the transport market deregulated, information on the performance of these sectors became scarcer.
- South Africa's rail system is old, on a narrow gauge and is uncompetitive in general freight which place a massive burden on road freight.
- The specific structure of South Africa's transport market is important because of high concentrations of people, resources and manufacturing plants far from the coast.
- Insistence on a rail network for commercial farming hampered investment in major densifying of corridors.
- The network was financed by cross-subsidising from high-value traffic on the corridors where investment did not keep track with concomitant high tariff based returns.

Freight Transport Flow Model for SA

Havenga goes on to say *"this ultimately caused illegal competition from road freight. Between 1950 and 1990 the system was fraught with lawsuits, policing and general apprehension for the road mode from the railways. Rather than developing intermodal systems as access roads improved and corridors densified further, the modes remained separate."*

- **Havenga's dissertation provides details of the national freight flow model that utilises vehicle counting technology at various permanent (398) and secondary stations (430) to model road data and actual rail data. The model was run in 1993, 1994, 2003 and 2004. This research confirmed that in the absence of intermodal traffic South Africa's rail system (which is larger than the next four in Africa combined) is in serious decline for the general freight mode.**

"Over the past 11 years total freight tonnage expanded by 50% with about 60% of the growth was on road. The only growth rail achieved was on ring-fenced export freight that grew about a third"

Freight Transport Flow Model for SA

South Africa's economic growth must be carried by the road network. The country cannot afford this because the dense corridors are becoming expensive. This in turn makes it difficult to enable the second economy to gain access to markets.

Branch Lines

"*More than 60% of the current rail network carries very little traffic. These lines have to be maintained to the same standard as the other denser lines so as not to compromise safety. They are part of the greater TFR network and are operated under the same cost structure – ie high overhead costs. They do not generate enough revenue to offset the cost of maintenance and overheads. It would thus make sense to run these lines under a different cost regime which might change their profitability.*"

In September 2009 Transnet released its results for the past financial year. The results confirm TFR's focus will remain on improving the movement of coal and iron ore as these commodities offer TFR the best profit opportunities. Developing and increasing rail freight movements along the Durban Gauteng and Gauteng Cape Town corridors is to receive on going attention. No specific commitment to seasonal, low volume traffic was evident

Legislation

The National Land Transport Strategic Framework for 2006 to 2011 *(NLTSF) published by the DoT (2005.9)*

…recognises the importance of efficient freight movement to the development of the country, through South Africa's increasing global competitiveness as well as minimising the cost of internal movement of goods.

- The NLTSF states that it is essential that a decisive freight transport strategy be implemented.
- This strategy will align freight transport logistics with economic and industrial development strategies, and it will also align port development and operations with freight flow demand patterns and ocean freight trends with the aim of increasing efficiency and lowering costs.
- At the same time, the strategy will be directed towards reducing inland freight costs that should result from increased efficiency and reliability from lower transit times, thus offering customers viable modal choices between road and rail modes.

Additional Background

- On July 2, 2009 a presentation by Transnet Freight Rail (TFR) in Cape Town gave details of the planned Superhighway, the Ngquarro Express, and some insight into the planned upgrades for the container depot at City Deep to improve security, service reliability and turn around times.
- A group of TFR management from Johannesburg and Cape Town said they were hopeful that some of the R80 billion Transnet had for infrastructure upgrades would be invested in more fruit trains.
- Apart from the significant environmental benefits claimed for rail transport it also includes moving more TEUs at a projected cost saving of 35% between Durban and Gauteng based on estimated industry averages and experience with one customer. Other benefits that are expected to flow from a regular rail service include no port storage or demurrage and time saving of up to three days.
- A senior manager, Customer Care at TFR in Cape Town confirmed the shortage of locomotives and drivers although the availability of drivers was improving. He said there was no shortage of wagons.

Questions

In response to my question to what extent will, or could TFR commit to seasonal low volume traffic - the answer was, "non-profitable loads are carried only by government edict

Who should own and operate such services?

Perhaps supplementary rail services would be better suited to public, private partnerships (PPP)?

Would the PPP route be more economical with potential to operate off a much lower cost base?

Comments from contributors

- Cape Town harbour coming in from Paarl and Hex River Valley is now only half as good as it was before - turn around time
- TFR set out to transport 10% of citrus exports but achieved only 4, 5%.
- Poor infrastructure, insufficient wagons especially for Maputo. A general lack of understanding as to how to deal with break-bulk. The industry is fragmented and there needs to be more communication between growers, pack-houses, exporters and TFR
- Receiving facilities at silos and mills are designed and built to receive by rail, now the service is all but collapsed.
- Road trucks take to long to unload. Silos are spec'd to unload 100 to 120 tons an hour, but with trucks only 50 tons an hour
- Rail handles 80% of our wheat imports. We would like it to be 100% but not enough wagons available for this.
- We would welcome more rail (*see BWSCF 2010 for latest findings)*

Summary

- If agricultural logistics is to succeed in gaining cost improvements and better efficiencies that will be essential to meet future agricultural production. There is a need to initiate and pursue engagement with Transnet and the relevant government departments to complete and commission the major rail corridors as soon as possible.
- The corridors concept could include establishing inland in-bond dry ports.
- There have been several relatively weak attempts to investigate the potential for intermodal traffic. Thought should be given to establishing a task team to engage with Transnet, government and private agricultural sector stakeholders on this issue.
- Branch lines - as stated earlier, should be subjected to an in-depth study. The University of Stellenbosch have undertaken some research on this matter for Transnet. It could be advantageous to explore the feasibility of extending the research done to date.

INFRASTRUCTURE REVIEWS | ROAD TRANSPORT

The **range of road services available to agricultural logistics, the status of road freight transport** and its **impact on the state of agricultural logistics**, based on;

- recent and historical infrastructures review from published documents
- relevant transport legislation
- comments from several contributors to the study.

- The state of South Africa's roads has been a topic of discussion for many years.
- A recent survey by the Automobile Association (AA 2008.10) found that R100 billion rand is now needed to fix the roads. Secondary (provincial roads) require R95 billion while the national road structures need a further five billion rand. The AA survey found that 35% of these roads are now only in fair or poor condition.
- NLTSF stated that an inadequate or inappropriate road network, or one that is not well maintained, can considerably increase the cost of moving people and goods.
- The DoT has started an investigation into a roads development plan that aims to identify constraints in the delivery of roads and make delivery more efficient

The plan includes

The plan to deliver more efficient roads

- Establish new or use existing appropriate transport entities that can provide, more efficient and effective delivery and maintenance of roads. This will be promoted in the provincial and local spheres.
- Develop appropriate information systems and funding mechanisms to support these entities in the delivery and maintenance of roads.
- Where possible the development will include SMME's and the enhancement of skills and capacity.
- The network will be based on a logical analysis of transport needs
- Linkage between primary sea, air, dry ports and public transport nodes…….

Background

Excerpts from Moving South Africa 1998

- Increased funding should be allocated to the densified routes which make up a strategic network in order to maintain appropriate standards and assist in the improvement of operating efficiencies of hauliers along these routes
- Increased funding should flow into the general road network, which has been suffering from continuing reduction in investment over time
- Roads that are not directly part of the strategic backbone must be maintained to an appropriate quality level, but not to the same standard as the core network

Participants and contributors to this study making regular use of secondary roads are generally in agreement that the poor condition of most roads add to their maintenance and tyre costs. Corrugations and pot holes inflict damage on fridge units and other components. An extract from the CSIR State of Logistics Survey for 2007 refers to a short case study: *"trucks operating on questionable roads suffered increased costs between 684 % and 1560%".*

(Available on the CSIR Website).

Relevant Legislation

An essential aspect of this brief infrastructure review is to revisit traffic and transport legislation since deregulation.

- In late 1980s road transport was deregulated and the National Road Traffic (NRTA) replaced the then four provincial ordinances
- Introduction of the RTQS – operator fitness, vehicle fitness and driver fitness
- After more than 20 years RTQS still not predictably or consistently enforced
- AARTO –administrative adjudication of road traffic offences still not implemented after 10 years in the making
- Overloading and unroadworthy vehicles are the result of erratic and poorly trained traffic officers
- Large increase in the national vehicle parc not supported with adequate human and physical resources to implement and enforce regulations
- Shippers and consignors still not jointly responsible for overloading and other offences where applicable

Impending Legislation

- Other than regulations referring to haulage tractors, transport regulations not specifically aimed at agricultural logistics
- DoT published a letter of intention (November 2009) to reduce axle mass loads to 8000kg from 9000kg for vehicles traversing secondary roads and the intention to ban certain commodities from the roads – *details of this not yet specified.*
- Responses to the intentions and subsequent developments since publishing the letter
  - Road Freight Association and other comments
  - DoT's Road Freight Strategy Stakeholders Survey
  - PBS meeting and the Jorgenson report
  - Dot's sponsored PBS Workshop in Polakwane

INFRASTRUCTURE REVIEWS | ROAD TRANSPORT

RFA estimate of payload losses

Concept	Existing Permissible Gross Mass	Existing Permissible Gross Mass	Gross Mass Reduction	Existing Permissible Payload	Existing Permissible Payload	Payload Reduction	%
6 x 4 Rigid - Concept 06	25 500	23 500	2 000	16 253	13 795	2 457	15.12
4 X 2 Truck Tractor – Tandem Semi Trailer - Concept 08	34 500	31 500	3 000	19 426	16 343	3 084	15.87
6 X 4 Truck Tractor – Tandem Semi Trailer - Concept 09	43 500	39 500	4 000	23 279	19 584	3 695	15.87
4 X 2 Truck Tractor – Tridem Semi Trailer - Concept 10	40 500	36 500	4 000	22 086	18 464	3 622	16.40
6 X 4 Truck Tractor – Tridem Semi Trailer - Concept 11	49 500	44 500	5 000	32 199	26 573	5 626	17.47
6 X 4 Truck Tractor - Tandem/Tandem Interlink - Concept 18	56 000	55 500	500	35 270	30 440	4 830	13.69
Average							15.74

Summary

- The implementation of the AARTO Act was planned for late 2010. By this time shippers and consignors of freight will be jointly responsible for vehicles found to be overloaded. This will result in transporters requiring undertakings to ensure they will not be left holding the baby.
- NLTSF requires transporters to be licensed when the corridors come into operation. It is recommended agri-logistics appoint an appropriate delegation to attend the annual transport legislation workshop
- Since road transport must shoulder the major share of transport for agro-logistics there is a powerful case for forming a task team to engage with government at all levels, organised road transport and all other industries and interest groups allied to transport – regardless of mode.
- Think of establishing an "agricultural logistics champion" to ensure that transport and logistics interests are more efficiently served and preserved.
- Establish a representative task team to engage with all sources that influence, direct and manage freight transport.

INFRASTRUCTURE REVIEWS | RURAL TRANSPORT & TRANSFORMATION

This section of the report reviews aspects of rural transport and transformation drawn from published documents and reports, views and comments from contributors to the study

- It is widely regarded both locally and internationally that steps to improve rural logistics require a level of government intervention and support as well as support from allied business if second economy supply chains are to participate in mainstream economic development and be employment creative.
- To be viable second economy logistics needs meaningful traffic consolidation to gain better access to markets and achieve lower transport costs.
- From a freight logistics perspective integration of the second economy must from a design and planning perspective commence immediately as it is fundamental to the success of rural agriculture (*Rural Transport and Economic Importance of Agriculture in Africa. Readers interested in more detail should visit the website).*

INFRASTRUCTURE REVIEWS | RURAL TRANSPORT & TRANSFORMATION

- Transport in Agriculture, based on some comments from *The South African Food Cost Review (2007)*, refers to a recent survey emphasising that the deterioration of the infrastructure and the cost of transport is heavily constraining the agricultural sector's competitiveness.

- Excerpts from NLTSF indicate a strategic countrywide road network will be identified in consultation with all three spheres of government based on:
  - a logical analysis of transport needs
  - An integrated plan to avoid duplication of infrastructure and a coordinated network within the SADC region.
  - SMMEs in the rural transport sector, particularly new entrants from previously disadvantaged communities will be nurtured.

- Excerpts from the status of Agro-Logistics in South Africa (February 2006) details a process to improve rural logistics – *see the next slide*

Agro-Logistics in South Africa (February 2006)

- Emerging farmer development – getting goods to market implies that all aspects of the supply chain be developed.
- As a guiding principle goods linkage with existing provincial and municipal transport and logistics infrastructures must be a priority for maintenance and development in poverty nodes of South Africa including investigating the viability of rail branch lines, feeder roads to larger and more developed routes.
- Develop packaging standards for size suited to mini-containers. Develop simple handling equipment and modular storage facilities to make more use of centralised depositories, consolidated loads and transport.
- A transport Brokering service was to be set up as a pilot scheme between 2007 and 2010 with a toll-free call centre and a suitable forum to develop special needs such as spatial needs, relevant vehicle specifications according to accredited specifications and adopting safety regulations.

Road Freight Transport, Logistics and Allied Services for Reward B-BBEE Charter

According to the DoT, the Department of Trade & Industries (DTI) has signed off the third draft of the Road Freight Transport, Logistics and Allied Services for Reward B-BBEE Charter (*restricted circulation 2007. 9. 10)* to, ensure maximum participation within this industry. It is important to note the charter outlines the Government's undertaking to achieve this vision and how this can be aligned to improve transport in agriculture.

- Develop and implement a programme to substantially increase investments in road infrastructure to eliminate current backlogs over the next decade with funds from the fiscus, parastatals, road users and industry.
- Set up a dedicated road infrastructure fund to finance the road component of these investments and ensure that the National Roads Agency (NRA) and provincial government departments maximise employment opportunities through the use of labour intensive methods in the maintenance and expansion of road infrastructure. This is reflective of the labour-absorbing projects promoted by ASGISA.

Road Freight Charter

- Commit to facilitate growth by ensuring the industry is attractive to investors and free of unnecessary regulation and ensure that over-regulation does not impede B-BBEE initiatives in the industry.
- Collaborate with all stakeholders to develop a strategy to grow the industry and create quality jobs by promoting the outsourcing of non-core transport and logistics operations of businesses. Businesses should give preferences to their own employees in the event of such activities/transactions.
- Engage relevant governmental departments such as the DTI and SARS and review current tax laws (fiscal policy), that make it difficult for small Black operators to enter the industry
- Effectively implement and monitor the RTQS and ensure compliance

NB: according to the DoT the Aligned-3rd Draft of this Charter is currently with the Parliamentary Standing Committee on Transport before submission to the Cabinet.

Summary

- It is encouraging to recall and note the extensive and inspired plans for the development and improvement of transport and related infrastructures that have been debated, reviewed, assessed and programmed to ensure South Africa will have an efficient and fair transport framework fully capable of providing the levels of service and ongoing cost improvements enshrined in our national transportation policy

- However, it is almost equally disappointing that government – at all levels – stakeholders and role players in the business of transport and logistics have lost so much time in getting to grips with these daunting challenges.

- Unfortunately this has allowed many of these excellent planned strategies to slip away or be placed on the back-burner.

- Hopefully, with more robust debate and engagement every effort will be made to motivate the political will to bring on the corridors so that rail can fulfil its vital national role, that no new road traffic laws will be introduced or amended before the existing and impending laws are fully implemented and continuously enforced

TAKING ADVANTAGE OF NATURAL SYNERGIES

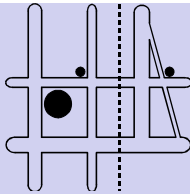

Comments drawn from the global Transport Knowledge Partnership (TKP) illustrates the excellent potential for rural transport and the agricultural sectors in particular by taking advantage of natural synergies.

- **Low cost initiatives to maintain rural gravel roads**
- **Coca-Cola Mpumpalanga**
- **Allied Publishing**
- **Lusaka milkman**

COST COMPARISONS 2004-2009

This section of the report describes and explains the type of vehicles applied to the various operating cost models in this study and that are frequently found in various agricultural transport tasks.

- A wide range of vehicle configurations are used to meet the diversified transport needs of agricultural logistics. This is so regardless of the whether such vehicles are owned and operated by farmers, producers, processors, manufacturers, distributors or providers of transport services.

- Other than a few exceptions, vehicles in standard execution (specification), readily available in a variety of sizes and configurations are employed to fulfil the many post harvest, distribution and delivery transport needs of each value chain covered in this study. Non-standard and abnormal load vehicles are exceptions that represent a small percentage of the overall transport requirements in agricultural logistics. Cattle Carriers and bulk flour tankers are examples of specialised vehicles found in this report.

- Based on the National Freight Database (NFD) four categories are chosen as representative of vehicles typically used to transport agricultural products and livestock. The NFD identifies vehicles by the number of axles for each category; this method is similar to that applied in the calculation of toll road fees.

COST COMPARISONS 2004-2009

Vehicle types

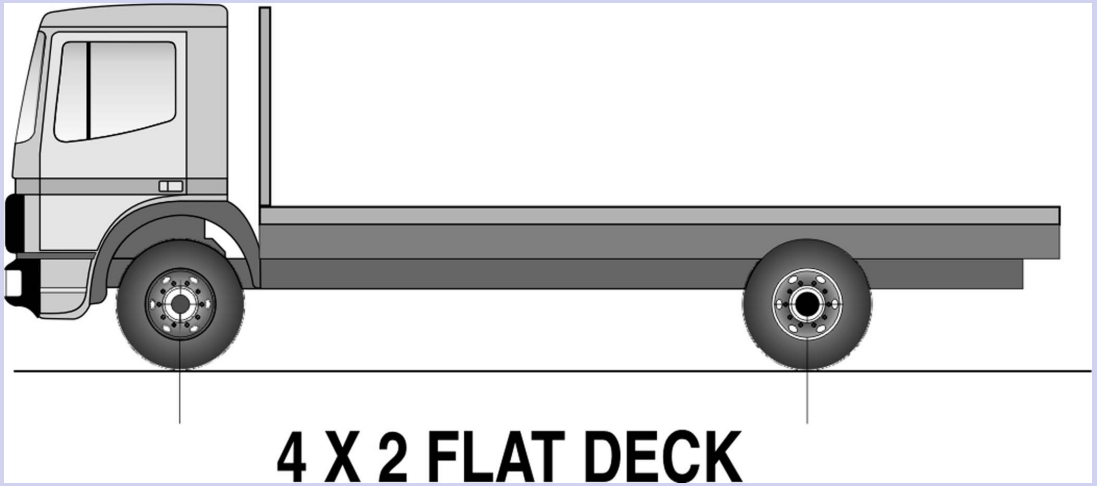

1.1– indicates a vehicle with a single drive axle such as a truck with a flat deck or drop side body. This category includes a single drive axle truck-tractor pulling a draw bar or semi-trailer.
The approximate maximum GVM/GCM for this category is 15 000kg and 25 500kg respectively. According to the NFD, this category accounts for approximately 21% of vehicles observed transporting agricultural produce and goods and 14, 5% of livestock transport. The percentages differ between provinces.

COST COMPARISONS 2004-2009

Vehicle types

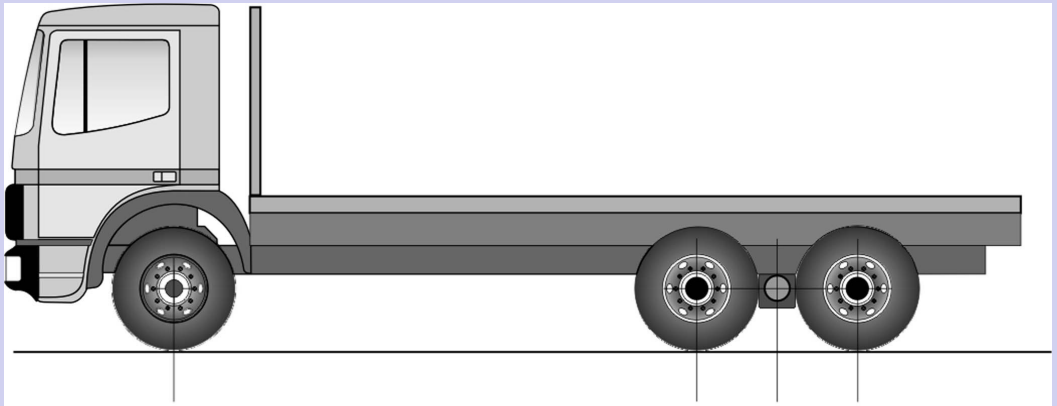

6 X 4 FLAT DECK

1.2– indicates vehicles with two (tandem) drive axles such as flat deck and drop side bodies and other structures such as tipping bodies and cattle carrier superstructures.
Tandem driven truck-tractors pull drawbar and semi-trailers.
The approximate GVM/GCM for this category is 25 500kg and 43 500kg respectively.
These vehicles account for 11% and 14, 5% of agricultural and livestock transport.

COST COMPARISONS 2004-2009

Vehicle types

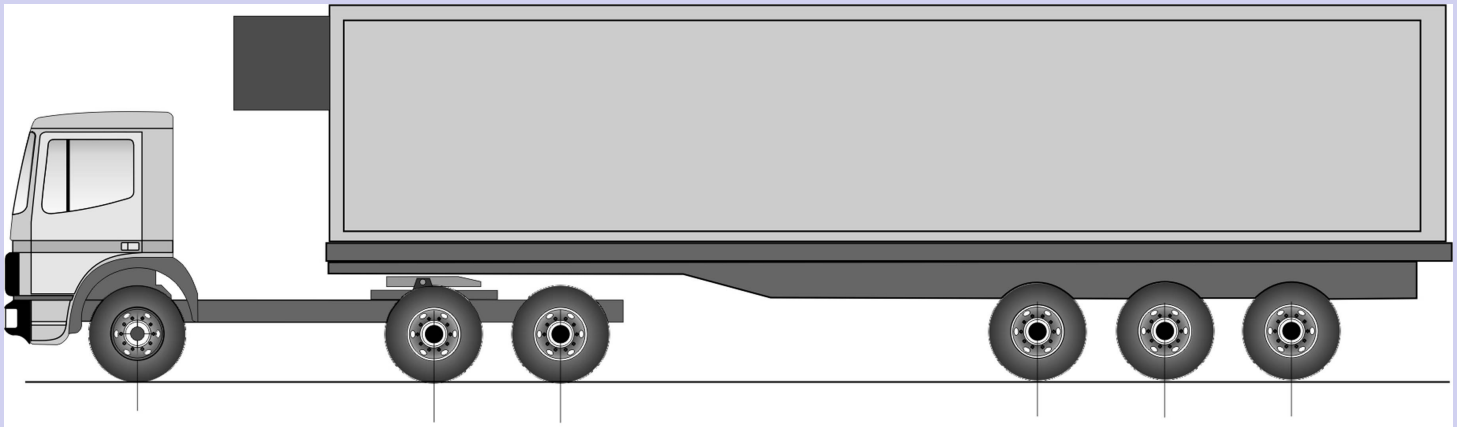

6 x 4 SIX-AXLE ARTICULATED REEFER

1.2.3 – indicates vehicles with tandem drive axles pulling a tridem semi-trailer.
These vehicles are widely used in agricultural and meat transport configured as volume vans, tautliners or reefers.
The approximate GCM for this category is 49 500kg.
According to the NDF they account for 14, 5% and 17, 5% of vehicles used in agriculture and meat transport respectively.

COST COMPARISONS 2004-2009

Vehicle types

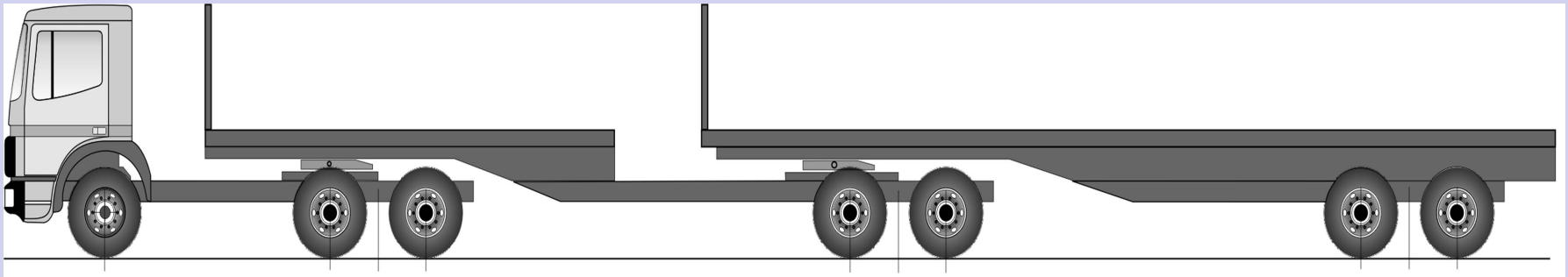

7 AXLE SUPER-LINK COMBINATION 6 X 4 TRUCK TRACTOR + TWO - TANDEM AXLE SEMI-TRAILERS

1.2.2.2 – indicates 7-axle articulated and combination vehicles such as Super Links and tandem driven trucks pulling four-axle drawbar trailers. The approximate GCM for this category is 56 000kg.
These vehicles are widely used in agriculture and livestock transport as the NFD confirms at 46% for agriculture and 31, 5% for livestock.

COST COMPARISONS 2004-2009

Assumptions applied to the cost comparisons

The data sourced from "Truck Operating Cost Benchmarks" compiled by MBCS and published quarterly in *FleetWatch Magazine* and on the *FleetWatch* website, is updated monthly and is widely used by a number of companies and organisations including the Centre for Logistics at Stellenbosch University. The assumed kilometres travelled per annum, workdays, payload capacities and pallet footprints are typical for average transport operations as they apply to each category.

- **This section of the report explains the assumptions applied to**
  - **Capital costs**
  - **Fixed costs**
  - **Variable costs**

Table 3 shows how the various elements of transport costs changed during the period 2003 to November 2009.

COST COMPARISONS 2004-2009

Summary of transport cost increases

- Total operating costs before accounting for overhead and administration expenses and toll roads where they apply is between 47 % and 54% or an arithmetic average of 9% a year.

- An average increase in the fuel price of more than 10% peaking at 42, 7 % of total vehicle operating costs in 2008 or an average of 37% a year for the six year period in the case of 7-axle vehicles

Capital Cost	Fixed Cost	Running Cost	Total Cost	Fuel Cost
23.6%	26.49%	83.4%	47%	63.8%

Fuel Cost Comparison

Fuel Price RPL - G)	% Inc	% Ops Cost	% Inc Ops Cost	% Run Cost	% Inc Run Cost
7.0345		39.76		60.30	
8.4445	20%	45.14	11.92%	65.19	8.1%
10.1245	44%	48.27	21.40%	67.91	12.62%

7-axle Interlink covering 200 000 KMPA. Costs include fixed and running costs as per March 2010 OCB. Costs exclude overhead costs and toll fees.

Chart shows impact of fuel price increase on operating costs and running costs following two 20% increase in fuel cost per litre

COST COMPARISONS 2004-2009

Choice of Vehicle Configurations

The proliferation of vehicle types and size is subject to volume, distances, roads, access to farms, silos, mills, abattoirs, pack houses, dairies and so on.

- Only the dominant vehicle configurations have been included in the analytic modules. Research confirms the dominant vehicle configurations are employed in all parts of the country.
- No useful purpose was seen to include an endless number of calculations that would contribute insignificantly to the analysis. However, should there be a case to review and include a particular example that adds value to the study, this can easily be accommodated
- Transport is dynamic and driven by demand and is ever-changing
- Current costs a shot in time and could be very different next year
- The state of freight logistics is not static the benchmarks are at best only indicative

COST COMPARISONS 2004-2009

Analysis of transport costs

- The analysis of transport costs as they relate to specific value chains is based on two concepts – operating costs and operational efficiency.
- **Operating Costs** reviews and evaluates the impact of current transport operating costs at various stages from post harvest to consumers when traversing rural, corridor and metro roads.
- **Transport Efficiency** reviews the impact of infrastructure and the operating environment on the productivity of vehicles at different stages from post harvest to consumers.
- The typical transport tasks found in the four nominated value chains (milk, fruit, meat and grains) are individually reviewed and evaluated. The review of each value chain consists of three phases.

Phase one **– transporting the harvest to silos, mills, pack houses, cold stores, abattoirs, processing facilities, etc.**

Phase two **– transporting food products from FMCG and other producers to distribution centres and supply chain service providers.**

Phase three **– transporting food products to wholesalers and retailers.**

COST COMPARISONS 2004-2009

Operating costs

Assumptions & Criteria

- Typical annual kilometres travelled on rural, corridor and metropolitan roads. Naturally there are large differences when taking into account the region, location and size of value chains.
- Payloads and load factors are typical for each vehicle configuration
- Running and fixed costs all of which are taken from the MBCS benchmarks
- Annual kilometres, vehicle type and size reflect typical usage according to the experience of the participants in this study.
- All costs are as at November 2009. The fuel price is an average between inland and coastal prices as listed by the SAPIA on its website and does not reflect any concession for agricultural transport operations. 286 work days has been applied to all modules for ease of comparison.

COST COMPARISONS 2004-2009

Operating costs

Assumptions and Criteria

Load factor:

- Most vehicles in agricultural logistics carry a load only one way. When this is so it is described as a 50% load factor. For example, a truck carrying a 10 ton payload from silo to mill and returns unladen has a load factor of 50%. If the truck returns with a load of say 5 tons, the load factor is then 75%.

KMPA:

-Total amount of kilometers travelled by the various vehicles per annum.

Work days:

-The number of work days that vehicles are typically used for collection and delivery of goods per annum.

Cost in rand per kilometer:

- Total operating cost divided by the kilometers travelled .

Cost per ton or kilo-litre delivered:

- Capacity times the number of days, times the load factor equals deliveries, operational cost divided by deliveries equals the cost per per ton or kilo-litre delivered.

Cost per ton/kilometer and cost per kilo-litre/kilometre:

- Total operating cost divided by kilometres travelled and the number of tons or kilo-litres carried taking into account the load factor.

Transport cost per kilogram or litre:

- Cost per ton or kilo-litre delivered divided by one thousand.

COST COMPARISONS 2004-2009

Dairy – Phase 1: Collecting milk from farms

Seven dairies, Sampro and various contracted transporters engaged in secondary distribution were consulted to gain realistic inputs to this section.

6x4 Rigid Tanker pulling a four-axle drawbar trailer tanker (capacities 13000 and 22000 litres = 35 000 litres) 6x4 Truck-Tractor pulling tridem semi-trailer tanker (capacities of 27 000 litres) The benchmark assumptions for this phase have been taken from the MBCS calculations dated November 2009

Vehicle Description	35 000 litre capacity (50% load factor)	27 000 litre capacity (50% load factor)
KMPA	100 000	50 000
Work days	286	286
Cost in rand/kilometre	R 13.88	R 18.13
Cost per kilo-litre delivered	R 277.40	R 234.00
Cost per ton/kilometre or kilo-litre/kilometre	79 cents	134 cents
Transport cost per litre	27.7 cents	23.5 cents

COST COMPARISONS 2004-2009

Dairy – Phase 2: Transporting packaged milk products to distribution centres

28 pallet, 6-axle tridem reefer

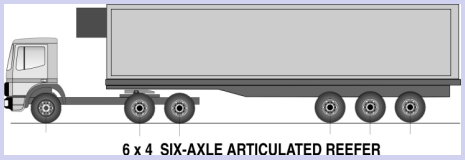

Vehicle Description	28 tons capacity (75% load factor)
KMPA	180 000
Work days	286
Cost in rand/kilometre	R 11.02
Cost per kilo-litre delivered	R 330.00
Cost per ton/kilometre or kilo-litre/kilometre	52 cents
Transport cost per litre	33 cents

COST COMPARISONS 2004-2009

Dairy – Phase 3: Transporting milk products to wholesalers and retailers

- 4x2 Insulated Rigid Truck with Fridge Unit (Capacity6 tons with a six pallet footprint)
- 6x2 Insulated Rigid Truck (Capacity 14 tons with a 14 pallet footprint)
- The benchmark assumptions for this phase have been taken from the MBCS calculations dated November 2009

Vehicle Description	6 000 litre capacity (50% load factor)	14 000 litre capacity (50% load factor)
KMPA	60 000	70 000
Work days	286	286
Cost in rand/kilometre	R 9.36	R 10.86
Cost per kilo-litre delivered	R 655.00	R 379.70
Cost perkilo-litre/kilometre	312 cents	155 cents
Transport cost per litre	65.5 cents	38 cents

COST COMPARISONS 2004-2009

Summary of dairy transport cost

Summary of Cost of transporting kilo-litres/delivered and cost per litre delivered

- Comments on Dairy – Confirm the high cost of secondary distribution. This is especially so given the challenge to regularly achieve optimum payloads and sufficient daily drops to recover fixed cost. Primary distribution is mostly outsourced and very competitive.
- Collecting raw milk from farms is probably one of the most difficult and potentially hazardous transport tasks that can be undertaken

Phase	Capacity 35+4 kilo/litre	Capacity 27+4kilo/litre	Capacity 35+6kilo/litre	Capacity 27+6kilo/litre
Phase 1	R 277.40	R 234.00	R 277.40	R 234.00
Phase 2	R 330.00	R 330.00	R 330.00	R 330.00
Phase 3	R 655.00	R 655.00	R 379.70	R 379.70
Total transport cost per kilo-litre	R 1 262.40	R 1 219.00	R 987.10	R 943.70
Total transport cost per litre	R1.26	R1.22	R 0.98	R 0.94

COST COMPARISONS 2004-2009

Fruit – Phase 1: Transporting fruit to pack houses or cold rooms

- 13 contributors drawn from fruit farming pack houses, cold rooms, transporters, distributors, PPECB, FPEF, SARDA, CGA and Safex were consulted in the process of setting the parameters for the fruit value chain.
- 8-ton Rigid truck with dropside body
- 14-ton Rigid Truck with dropsied body
- The benchmark assumptions for this phase have been taken from the MBCS calculations dated November 2009

Vehicle Description	28-ton payload (50% load factor)	34–ton payload (50% load factor)
KMPA	150 000	150 000
Work days	286	286
Cost in rand/kilometre	R 11.67	R 8.37
Cost per ton delivered	R 437.00	R 258.00
Cost per ton/kilometre	83 cents	49 cents
Transport cost per kilogram	44 cents	26 cents

COST COMPARISONS 2004-2009

Fruit – Phase 2: Transporting fruit to harbours, distribution centres and food processors

- 6x4 Truck-Tractor and Tridem Reefer Semi-Trailer (28/30-ton payload)
- 7-axle Interlink Tautliner (34/36-ton payload)

Vehicle Description	28-ton payload (50% load factor)	34–ton payload (50% load factor)
KMPA	150 000	150 000
Work days	286	286
Cost in rand/kilometre	R 11.67	R 8.37
Cost per ton delivered	R 437.00	R 258.00
Cost per ton/kilometre	83 cents	49 cents
Transport cost per kilogram	44 cents	26 cents

COST COMPARISONS 2004-2009

Fruit – Phase 3: Distribution and delivery to retailers and processors

- 4x2 insulated van with or without fridge unit (payloads between 2 and 8 tons)

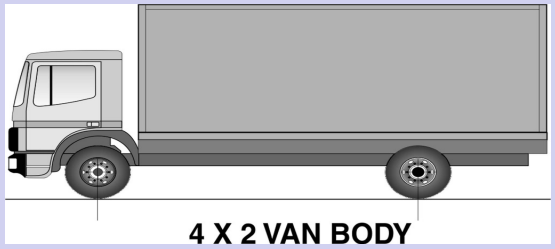

Vehicle Description	6-ton payload (50% load factor)	4–ton payload (50% load factor)
KMPA	60 000	30 000
Work days	286	286
Cost in rand/kilometre	R 15.08	R 25.10
Cost per ton delivered	R 1 055.00	R 1 317.00
Cost per ton/kilometre	R 5.03	R 12.55
Transport cost per kilogram	R1.05	R1.32

COST COMPARISONS 2004-2009

Summary of fruit transport cost

Summary of transporting costs in ton/delivered and cost per kg delivered

- Post harvest transport to pack houses and cold rooms is too diversified to obtain credible inputs. Traditionally export fruit is transported by accredited transporters engaged in transporting perishable products.
- Where volumes are large enough, the same transporters serve local municipal markets and other food producers.

Phase	Capacity 8+28+6 tons	Capacity 8+34+6 tons	Capacity 8+28+4 tons	Capacity 14+28+6 tons	Capacity 14+34+4 tons	Capacity 14+28+4 tons
Phase 1	R 514.00	R 514.00	R 514.00	R 510.00	R 510.00	R 510.00
Phase 2	R 437.00	R 258.00	R 437.00	R 437.00	R 258.00	R 437.00
Phase 3	R 1 055.00	R 1 055.00	R 1 317.00	R 1 055.00	R 1 317.00	R 1 317.00
Total transport cost per ton	R 2 006.00	R 1 827.00	R 2 266.00	R 2 002.00	R 2 085.00	R 2 264.00
Total transport cost per kilogram	R 2.00	R 1.83	R 2.27	R 2.00	R 2.08	R 2.26

COST COMPARISONS 2004-2009

Meat – Phase 1:Transporting livestock to abattoirs

Seven abattoirs, transporters and distributors were consulted in the formulation of these benchmarks.

- Transporting Livestock and slaughtered meat
- 8-ton rigid truck with cattle carrier body (payload 8-tons)
- 6x4 Truck-Tractor and Tridem Cattle Carrier (payload 27, 5 tons)

Vehicle Description	Truck & Trailer with 16-ton payload (50% load factor)	Tridem Cattle Carrier 27,5 ton payload (75% load factor)
KMPA	85 000	240 000
Work days	286	286
Cost in rand/kilometre	R 6.75	R 7.26
Cost per ton delivered	R 116.17	R 295.00
Cost per ton/kilometre	56 cents	35 cents
Transport cost per kilogram	11.6 cents	30 cents

COST COMPARISONS 2004-2009

Meat – Phase 2: Transporting slaughtered meat to butcheries and processors

- 6x2 Rigid Truck with meat body and Fridge Unit (payload 13, 5-tons)
- 6x4 Truck-Tractor pulling a Tridem semi-Trailer Reefer (payload 28-tons)

Vehicle Description	6x2 Truck 13,5ton payload (75% load factor)	Tridem Reefer 28 ton payload (75% load factor)
KMPA	180 000	180 000
Work days	286	286
Cost in rand/kilometre	R 6.47	R 10.94
Cost per ton delivered	R 402.00	R 328.00
Cost per ton/kilometre	64 cents	52 cents
Transport cost per kilogram	40 cents	33 cents

COST COMPARISONS 2004-2009

Meat – Phase 3: Transporting meat to retailers

- 4x2 Insulated van with fridge unit (payload four tons)

Vehicle Description	Insulated Van 4-ton payload (50% load factor)
KMPA	30 000
Work days	R 286.00
Cost in rand/kilometre	R 13.94
Cost per ton delivered	R 731.00
Cost per ton/kilometre	R 6.97
Transport cost per kilogram	73 cents

COST COMPARISONS 2004-2009

Summary of meat transport cost

Summary of transporting slaughtered meat in ton/delivered and cost per kilogram delivered

A large percentage of slaughtered meat is transported by a variety of outsourced transporters. Suitable vehicles are equipped with specialised meat bodies, are insulated and refrigerated. Some of South Africa's most respected transporters haul meat for the largest abattoirs and meat product producers.

Phase	Capacity 4+13.5+4 tons	Capacity 27.5+13.5+4 tons	Capacity 8+28+4 tons	Capacity 27.5+28+4 tons
Phase 1	R 236.00	R 295.00	R 236.00	R 295.00
Phase 2	R 402.00	R 402.00	R 328.00	R 328.00
Phase 3	R 731.00	R 731.00	R 731.00	R 731.00
Total transport cost per ton	R 1 369.00	R 1 428.00	R 1 325.00	R 1 354.00
Total transport cost per kilogram	R 1.37	R 1.43	R 1. 33	R 1.35

COST COMPARISONS 2004-2009

Grain – Phase 1:Transport to silo's, mills, processors, ect.

15 contributors drawn from organised grain, transporters, distributors, wholesalers and retailers provided input for the benchmarks applied to the grain sector of the report

- 8-ton Rigid Truck with drop sides (8-ton payload)
- 8-ton truck and 8-ton draw bar trailer both with drop sides (16-ton payload)
- 7-axle twin bin side tipper (payload 34-tons)
- 6x4 TT with 30m3end-tip semi-trailer (payload30-tons)

Vehicle Description	Truck (DS) 8-ton p/l (50% load factor)	Truck & Trlr 16-ton p/l (50% load factor)	Twin Bin Tip 34-ton p/l (50% load factor)	30m^3 End Tip 30-ton p/l (75% load factor)
KMPA	80 000	80 000	150 000	75 000
Work days	286	286	286	286
Cost in rand/kilometre	R 6.97	R 8.25	R 9.69	R 13.65
Cost per ton delivered	R 488.00	R 288.00	R 299.00	R 159.00
Cost per ton/kilometre	174 cents	103 cents	57 cents	61 cents
Transport cost per kilogram	49 cents	29 cents	30 cents	16 cents

COST COMPARISONS 2004-2009

Grain – Phase 2: Transport to bakeries, food processors

- 6x4 TT and 50m^3 Tridem Bulk Tanker (payload 28-tons)
- 7-axle Tautliner (payload 34-tons)

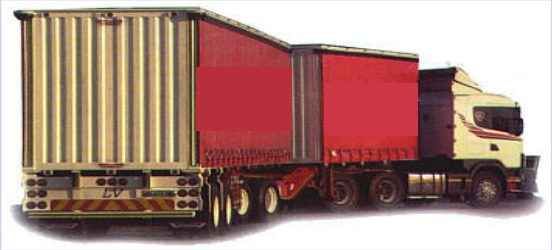

Vehicle Description	Tridem Bulk Tanker 28-ton payload (50% load factor)	7-axle Tautliner 34-ton payload (75% load factor)
KMPA	50 000	180 000
Work days	286	286
Cost in rand/kilometre	R 21.49	R 9.31
Cost per ton delivered	R 268.00	R 230.00
Cost per ton/kilometre	154 cents	36 cents
Transport cost per kilogram	27 cents	23 cents

COST COMPARISONS 2004-2009

Grain – Phase 3: Transporting finished grain products to wholesalers and retailers

- 4x2 Rigid Volume Van (6-ton payload)

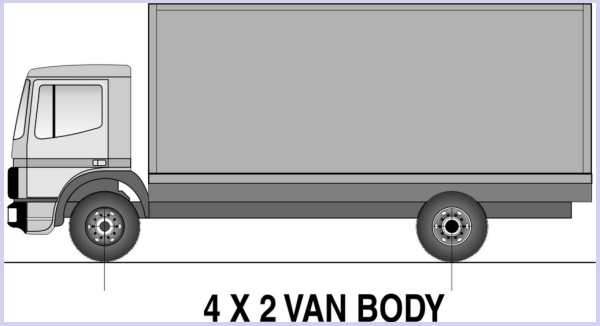

Vehicle Description	Rigid Volume Van 6-ton payload (75% load factor)
KMPA	45 000
Work days	286
Cost in rand/kilometre	R 11.31
Cost per ton delivered	R 593.00
Cost per ton/kilometre	R 3.77
Transport cost per kilogram	59 cents

COST COMPARISONS 2004-2009

Summary of grain transport cost

Summary of cost of transporting ton/delivered and cost per kilogram delivered

- Capacity 1 – 8-ton drop side truck/bulk tank/ 6-ton volume van
- Capacity 2 – 8-ton truck with 8-ton trailer/bulk tanker/6-ton volume van
- Capacity 3 – 7-axle twin bin/bulk tanker/6-ton volume van
- Capacity 4 – 30 m3 end tip/7-axle tautliner/6-ton volume van

Phase	Capacity 1	Capacity 2	Capacity 3	Capacity 4
Phase 1	R 488.00	R 288.00	R 299.00	R 299.00
Phase 2	R 268.00	R 268.00	R 268.00	R 230.00
Phase 3	R 593.00	R 593.00	R 593.00	R 593.00
Total transport cost per ton	R 1 349.00	R 1 149.00	R 1 160.00	R 1 122.00
Total transport cost per kilogram	R 1.35	R 1.15	R 1.16	R 1.12

COST COMPARISONS 2004-2009

Comments on grain transport

- Grains differ widely in terms of physical characteristics, handling requirements and durability.
- The module considers the transport cost for seven different combinations and some additional ones are included in the appendix.
- The volumes, distance, availability of the farmer's own transport, choice of silo and access to outsourcing are some of the factors that determine the type and size of vehicles used in this phase of transporting grains.
- The use of bulk tankers to transport milled wheat (flour) to large bakeries appears expensive due to the low annual kilometres these vehicles frequently cover.
- Vehicles transporting maize is largely the result of size, location and destination. Unloading facilities vary and where end- or side-tipping is possible such vehicles will be employed.
- Final delivery varies between two-ton payloads to the maximum that can be transported on rigid vehicles and medium-size articulated tautliners.

TRANSPORT EFFICIENCY

Transport efficiency is about achieving a desired level of performance at least cost.

- Transport productivity can be expressed in any convenient and relevant unit of useful work within a given timeline measured in hours.
- Units of useful work are usually expressed in tons, litres, kilo-litres, cubic metres, pallets, cases or any other unit if it is relevant.
- The product of the unit and the distance they are transported can be as ton/km, litre/km and so on.
- Units of ton/km produced by trucks are extremely perishable if not taken up at the time they are produced. Think of trucks as factories that produce a transport commodity such as ton/kms or whatever is most applicable.
- Payloads and kilometres traveled have a significant impact on ownership costs. Tare and allowable mass are the determining factors. Transport efficiency is about optimising payload, average speed and kilometres traveled.

What is a Truck?

- **When it is fully loaded and standing it is a**

  Warehouse!

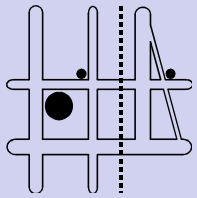

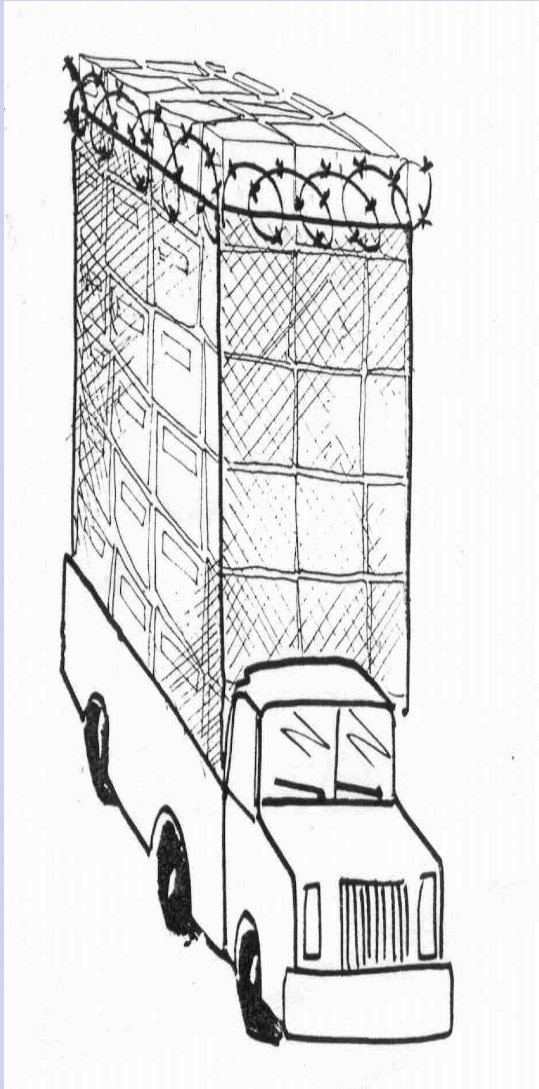

What is a Truck?

- **When a truck is standing and is empty it is a *Monument!***

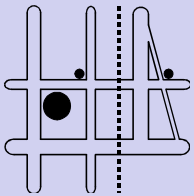

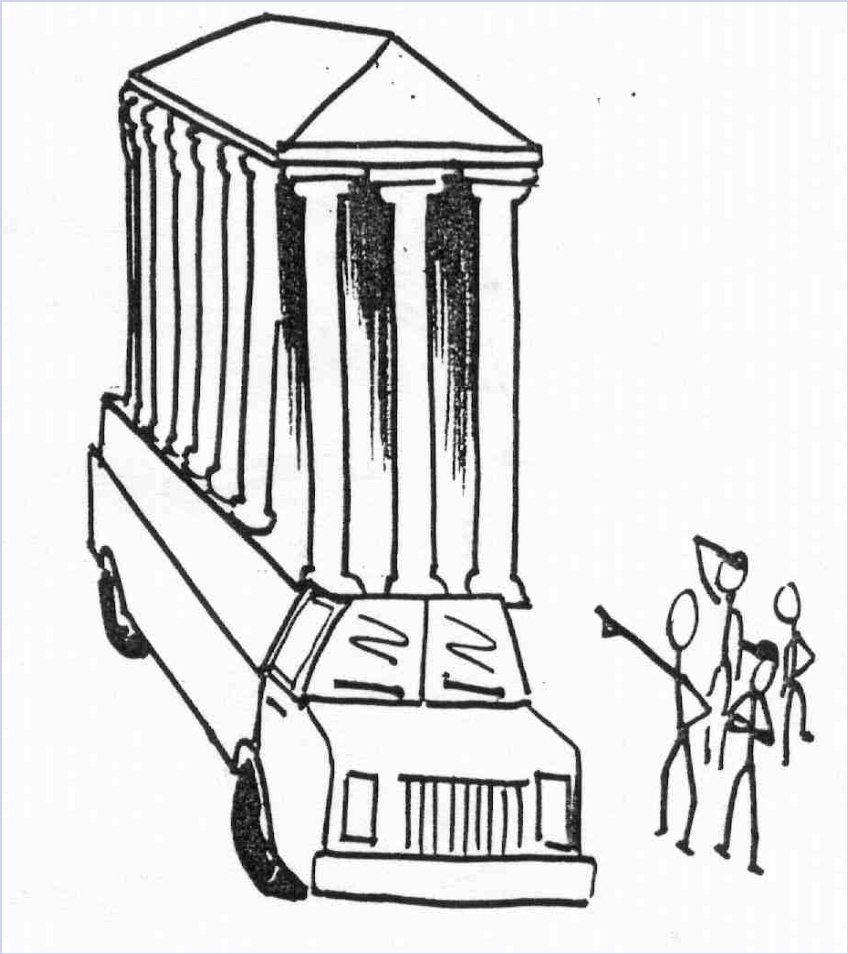

What is a Truck?

When a truck is moving and is empty it is a *job opportunity for the driver!*

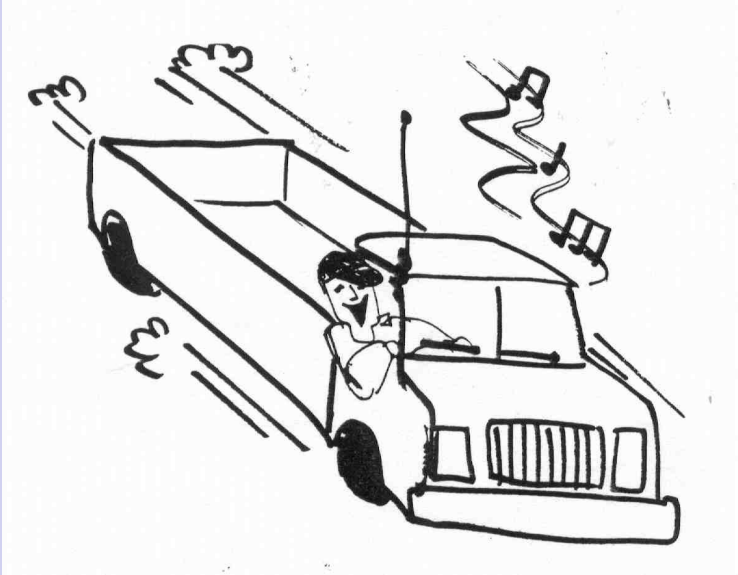

What is a Truck

- **A truck is a truck only when it is fully loaded and moving**

TRANSPORT EFFICIENCY

To gain a better perspective of the factors that impact on transport efficiency it is cogent to review some of the challenges that daily confront the organisations and individuals that contributed to this study. Without any order of priority here is a synopsis of some of the views they expressed:

TRANSPORT EFFICIENCY

Challenges faced: Dairy, milk collection

- Estimating daily volumes. Weather – rain, cold; calving; farmer still milking when tanker underway; milking not completed when tanker arrives
- Narrow, muddy, potholed farm roads; inadequate turning circles at milking parlours
- Traffic congestion, road works and need to cross-pump; security of trailers parked off for cross-pumping
- Poor condition of provincial and municipal roads; burst tyres and higher maintenance expense due to poor and rough roads. In some areas this is put down to no money available for maintenance.
- Outages
- Some dairies report ongoing driver abuse leading to frequent repetitive breakdowns such as clutch and gearboxes.
- Fleet managers are not happy with replacement parts pricing and in many instance quality and availability of parts. Tyre price are also found to be expensive with prices rising rapidly during the past two years

TRANSPORT EFFICIENCY

Consequences for dairy, milk collection

- Volume estimates impact fleet size, vehicle configurations and load factors making it difficult for ongoing achievement of optimal loads.
- Under-loaded tankers are expensive to operate. Delays for whatever reasons including loading/unloading, travel time breakdowns or outages create and contribute to difficult operating conditions
- From an operational perspective transporting milk mainly on gravel roads adds 50% to maintenance and tyre costs. Economic life (or useful life) is limited to 800 000 kilometres for truck-tractors and less for large rigid tankers.
- Dairy groups are investing in technology optimise the routing and scheduling of tankers that take into account location, distance, estimated daily volume, agreed collection time slots and constant communication with farmers and drivers.
- Transport performance and efficiency is closely monitored using management ratios such as litre per kilometre and the cost per litre/kilometre. Drivers are trained to meet the demanding standards for efficient milk collection.

TRANSPORT EFFICIENCY

Dairy, primary distribution

- The distribution of milk and milk products from dairies to distribution centres and large wholesaler/retailers is usually outsourced to transporters engaged in refrigerated transport. Many of the transporters haul a variety of perishable products including fruit, meat and dairy. The comments made by such transporters are included under the heading of outsourced transport.

Dairy, secondary distribution

- Some improvement at the back door. Too many retail outlets still under-resourced and poorly designed to handle unloading efficiently
- Up to 40% of the workload can be lost due to delays
- “Cherry picking” is extremely costly with significant impact on vehicle utilisation with consequent negative impact on transport efficiency
- The growth in the number of retail outlet tends to spread loads over more drops compromising utilisation
- Smaller dairies must sell the entire production everyday

Consequences for dairy secondary distribution

- Careful route planning and early starts are fundamental. Some dairies segment the market by setting time limits for unloading before agreeing the slot times. Unloading times vary between 22 and 90 minutes depending on the size of store and management at the backdoor. Cash customers are the quickest.
- Routes are revisited every six months and replanned to suit trends and developments that have taken place. Night deliveries are commenced at 15.30 in the afternoon and completed by 22.30. Starting with the best organised drops, there are few delays, less traffic, fewer accidents and incidents.
- To solve the driver problem some take drivers from labour brokers as extra drivers, employ a driver trainer and after six month employ the drivers that have made the grade.

TRANSPORT EFFICIENCY

Challenges and consequences for fruit distribution

- Cold rooms not always at set point
- Shippers expect LTLs to be hauled for a lower rate
- Must cover at least 180000 kmpa @ a market-related rate to earn an 8% return when hauling fruit
- We need a 90% load factor – compatible return loads no easy
- Shippers need to understand we are not paid demurrage
- The fuel price must be adjusted monthly
- Very little interaction from shippers
- When strictly applied PPECB certification makes positive difference
- Turnaround at CTN harbour now much slower
- Port authority does not co-operate. DoT has not responded
- Roads need to improve, cold chain is compromised by damage to fridges, etc
- With delays we cannot cover more than 650 – 750 km per day over 14 -15 hour day
- Citrus loads to Durban involve delays of three days with horrendous fridge costs.
- FML contracts a rip off, parts replaced willy-nilly, parts prices are excessive and work too often redone
- Where owner drivers are involved principals rarely have knowledge of transport costs

TRANSPORT EFFICIENCY

Comments from Fresh Produce Exporter's Forum (FPEF)

FPEF is looking for better modal efficiency and not 100% of the traffic.

- **Presently 10% is moved by rail.**
- **The plan is to gain a 35% share by 2014.**
- **FPEF's proposals of what needs to be done include:**
  - Acquire more train sets as a fundamental requirement
  - Turn around times must be improved and found to be reliable and sustainable
  - Schedules must be predictable
  - Abandoned sidings must be rehabilitated or an acceptable alternative found
  - Pack houses must be reviewed and assessed with the objective of improving management and flexibility
  - Congestion at Ports must improve
  - Other concerns that need attention include cable theft and power outages

Slaughtered Meat

Why 14-ton payload vehicles increasingly favoured

- **Unreliable loading skills at abattoirs**; more stability and less damage to inside of the body when under-loaded. This refers to roof and side panel damage
- Easier to handle when faced with poor access to and inadequate unloading facilities.
- 90% of shippers, consignors and consignees have **poor cost controls** or any real knowledge of transport costs
- Ridiculous **standing time** results in vehicles standing 80% of the time and 20% with the wheels turning, impacts fleet size negatively.
- **Driver abuse** is a major problem

Meat transporters are making a determined effort to find suitable return loads and are doing well with vegetables out of Mpumalanga and fish out of Cape Town as examples. Smaller abattoirs focus on "right sizing" their fleets to improve the efficiency factor.

TRANSPORT EFFICIENCY

Grains

The grains value chain is transport intensive from the post harvest stage to the super market trolley. Whoever fulfils the secondary distribution phase endure the same challenges as it applies to dairy, fruit and meat, this because we are speaking about the same retail and food industry outlets and the same type of vehicles. Here is a small sample of what they say.

- Silos and mills built to receive grains by rail. Unloading takes to long and is expensive and problematical – turning circles on site are hard on tyres and create other problems mentioned in this report
- Poor road conditions damage vehicles especially in the rural and informal areas.
- Availability of replacement parts and dealers closing in key areas.
- Driver training and motivation needed to assist with low salaries and challenges of the job
- Due to mainly short distances and few return loads vehicles not fully utilised
- When fuel prices high farmers deliver to nearest silo. Some silos too small so grains must be moved – double handling

TRANSPORT EFFICIENCY IN ACTION

Taking note of the challenges in transporting agricultural produce and products we can understand there is scope for improving transport efficiencies. Even small improvements in kilometres travelled, average payload and more return loads can have a dramatic impact on actual costs.

There tends to be a fixation about CPK – cents per kilometres as the basis of judging weather the cost of transport is reasonable or expensive.

Let us consider a small variation of the factors we see in the phase 1 of the dairy value chain with the 27 000 litre bulk milk tanker travelling 50 000 kmpa.

TRANSPORT EFFICIENCY IN ACTION

Payload v RPK

KMPA	R/Km	Kilo-Litre delivered	CP Kl/Km	CPL
50000	18.132	234	1.34	23.5
65000	15.240	266	1.17	26.7
+30%	-16%	+13.6%	-12.7%	+13.6%

- Let's assume the tanker covers 65 000 kmpa, an improvement of 30%.
- The cost per kilometre decreases by 16% to R15, 24.
- However, its average payload was 26 000 litres, about 96% of its optimal capacity.
- The result is an increase of 13, 6% to deliver a kilo-litre of milk.
- The small loss of average payload outweighs the importance of RPK.

TRANSPORT EFFICIENCY IN ACTION

Improving productivity

KMPA	R/Km	Ton delivered	CPT/Km	CPK
180 000	9.31	230	36	23
180 000	9.31	186	30	19
No change	No change	-20%	-20%	-20%

- Here is another example, this time from the Grains model.
- We look at the 7-axle Tautliner covering 180 000 kmpa with an average payload of 34 tons and a 75% load factor.
- Assume the average payload can be improved on average by just one ton (approx 3%) and the load factor gets to 90% as a result of more return loads.
- No change in the number of kilometres travelled results in a stable RPK cost; however, a huge 20% in the cost of doing the transport is achieved off the back of modest and sustainable productivity improvements.

TRANSPORT EFFICIENCY IN ACTION

Secondary distribution inefficiencies

The lack of transport efficiency is the major cost driver for almost all secondary distribution transport operations because invariably they are low kilometres, less than optimal payload, less than optimal work days thereby limiting utilisation of time and payload.

Based on a realistic level of efficiency for these vehicles, only a small percentage, achieve much more than 15% of the potential. This as you will have noted is strongly in evidence in the secondary distribution module of all four value chains.

CHALLENGES AND RECOMMENDATIONS

For agricultural logistics

- Recent economic boom intensified challenges for agri logistics
- Rapid growth in local and export demand strained scarce financial, physical and human resources and skills to keep up with production, failing infrastructures and strained systems and information
- During this period of high demand the cost of transport and related logistic activities increased rapidly with major impact from the high price of diesel
- The challenges that need consistent and determined attention before ongoing transport cost improvements can be realised and sustained require the agreement and commitment of all in agricultural logistics to whom it applies when addressing the various issues.

CHALLENGES AND RECOMMENDATIONS

Recommendations for rail and road

- If agricultural logistics is to succeed in gaining cost improvements and better efficiencies essential to meeting future agricultural production, it needs to initiate and pursue engagement with Transnet and the relevant government departments to complete and commission the major rail corridors as soon as possible.
- The concept of corridors could also include establishing inland in-bond dry ports to relieve the congested situation in Durban.
- An ILDP located near the Zimbabwe border would remove from the roads all freight destined for the land-locked neighbouring states.
- Establish a competent task team to engage with Transnet and government to explore intermodal possibilities.
- Regarding the branch lines, as stated earlier in this report, should be subjected to an in-depth study.

CHALLENGES AND RECOMMENDATIONS

Recommendations for rail and road

- Agri-logistics need to engage the DoT on an affordable and sustainable method to ensure roads are maintained. Feedback received from virtually every participant confirms that poor road conditions is a cause for major cost increases and expensive delays.

- Basic access, especially on gravel roads, can be achieved with low-cost initiatives to ensure all-season use for local transport means – *TKP illustration*

- Keep rehabilitated to maintainable standard, gravel roads can be kept in good condition by "preventive" maintenance using low cost, small agricultural equipment suitable for local contractors or community initiatives (think emerging farmers and the projects envisaged by NLTSF and Agro-logistics for SA – 2006). *See the report for more detail*

- Explore ways to improve access to better markets. Use examples of what can be done without the need to spend large sums of money as inspiration and motivation

CHALLENGES AND RECOMMENDATIONS

Recommendations for transport and traffic

- Establish a competent, representative task team to engage with the DoT, SABS and other relevant bodies to resolve the hi-cube container problem and agree satisfactory and reasonable decisions regarding axle mass regulations. This needs to be addressed as a matter of priority.
- Engage with the DoT to implement the AARTO Act sooner rather than later. On going uncertainty adds to unrealistic speculation and rumour mongering
- Transport and traffic legislation trends will continue to emerge and develop. It is recommended that a task team of appropriate representatives of agri-logistics be appointed to attend the annual transport legislation workshops and other relevant events.

CHALLENGES AND RECOMMENDATIONS

Improving agro-logistics efficiencies

- Develop a set of appropriate agri-logistics transport operating cost benchmarks
- This should be comprehensive in its coverage of the key transport tasks and vehicle configurations taking note of relevant regional and provincial differences.
- The benchmarks should also emphasise the impacts on operating costs for realistic and achievable levels of transport efficiency
- The criteria for agro-logistics benchmarks should be based on credible inputs that offer continuity. These could be published twice annually to an audience acceptable to agro-logistics.
- Ensure that its transport and logistics interests are more efficiently served and preserved appoint a representative task team to engage with all sources that influence, direct and manage freight transport *(newsletter, annual Workshop)*

CHALLENGES AND RECOMMENDATIONS

- The current status of land freight transport in general and specifically as it relates to agricultural logistics is eloquently portrayed by the experience and expertise of the varied organisations and individuals that contributed to this study.
- The numerous programmes and recommended projects that flow from MSA, the NLTSF and other meaningful published works referred to in this report provide convincing evidence for the need to establish a representative task team representing both public and private agricultural sector stakeholders.
- Such a team, working together can bring to bear collective influence guidance and leadership to resolve the many challenges that threaten the prosperity of our vast agricultural industries.
- The decision to form such a task team would be fully in accordance with the mission statement in the National Transportation policy for land freight transport.

To provide safe, reliable, effective, efficient and fully integrated land freight operations and infrastructure which best meets the needs of customers at improving levels of service at an equitable cost in a fashion which supports government strategies for economic and social development while being environmentally and economically sustainable.

CHALLENGES AND RECOMMENDATIONS

- The Durban/Gauteng and Gauteng/Cape Town corridors
- Establishment of inland dry ports
- Explore the feasibility of intermodal transport services
- Optimisation of modal strengths
- With fully functioning corridors explore potential for smme and BBBEE transporters (*see Road Freight Industry Charter)*
- Pursue solutions for reinstating branch lines, road transport cannot shoulder all freight movements
- AARTO & NLTSF brings new responsibilities for all owners and operators of vehicles, the task team is advised to appoint an "Agri-Logistics Champion"
- The task team should initiate a publication that communicates the trends and developments that impact agricultural logistics.
- The recommendation is to allocate space in its regular publication to cover this topic or implement a newsletter for circulation to those across the value chains that would benefit from the knowledge.

CONCLUSION

This study has strived to keep its focus on identifying transport costs and defining the way in which they impact on agro-logistics

How we use transport has far more impact than just how much we need to pay for the components of transport operations. It should now be clear that the cost of road transport is severely compromised by the impact of mainly uncontrollable factors

To date, there is little evidence in South Africa's history of governments, at any level, the business, mining, and agricultural communities, or FMCG manufacturers seen to be demonstrating the same degree of recognition as found in finance, marketing and production. Even the advent of just in time principles (JIT) and the so called logistics revolution, failed to sustain any real commitment to improving transport efficiency. The future for transport will be what we make of it.

THANK YOU

ACKNOWLEDGEMENTS

- NAMC, Prof Andre Jooste
- Alta Swanepoel & Associates
- Barloworld Logistics
- Boomerang Fruit Farm
- Carrier Transicold
- Citrus Growers Association (CGA)
- Dairybelle
- DewFresh Dairies
- Duncan Mec
- Elite Fibre
- Faircape Dairy
- Fast n Fresh
- Fresh Produce Exporter's Forum
- Freshmark & ShopriteCheckers
- Grain Carriers
- Grains Cape
- Henred Fuehauf
- Hestony Transport
- HFR
- Holfontein Abattoirs
- Imperial Fleet Services (for Clover)
- Institute of Road Transport Engineers
- Karan Beef
- Kobus Minaar Transport
- KZN Traffic Inspectorate
- Liebentrans
- Moe Logistics
- Murray Steel Transport
- National Chamber of Milling
- Nestle
- NW Koperasie
- Parmalat SA
- Perishable Products Export Control Board
- Roelcor
- Safex
- SAMPRO
- SASKO (Krugersdorp)
- SASKO (Malmesbury)
- SASKO (Paarl)
- South African Petroleum Industry Association
- South African Refrigerated Distributors Association
- Sovereign Foods, Uitenhage
- Spar Group
- Spar Western Cape
- Standard Bank
- Sujen Padayatchie
- Supply Chain Services
- TFM
- Thermo-King
- Transnet Freight Rail
- Unigrains Trading
- Unitrans Epol Division
- University of Stellenbosch
- Van der Vyfer Transport
- Vector Logistics
- Western Cape Government Transport MEC
- Woodlands Dairy